GENERAL NOTES:
FOR FLUSH MOUNT APPLICATION:
MODEL NO.: AOR-IP-TR160 TRIM RING DOESNOT MOUNT TO THE ENCLSOURE AND IS INSTALLED DIRECTLY TO THE WALL FOR ROUGH-IN COVER UP.

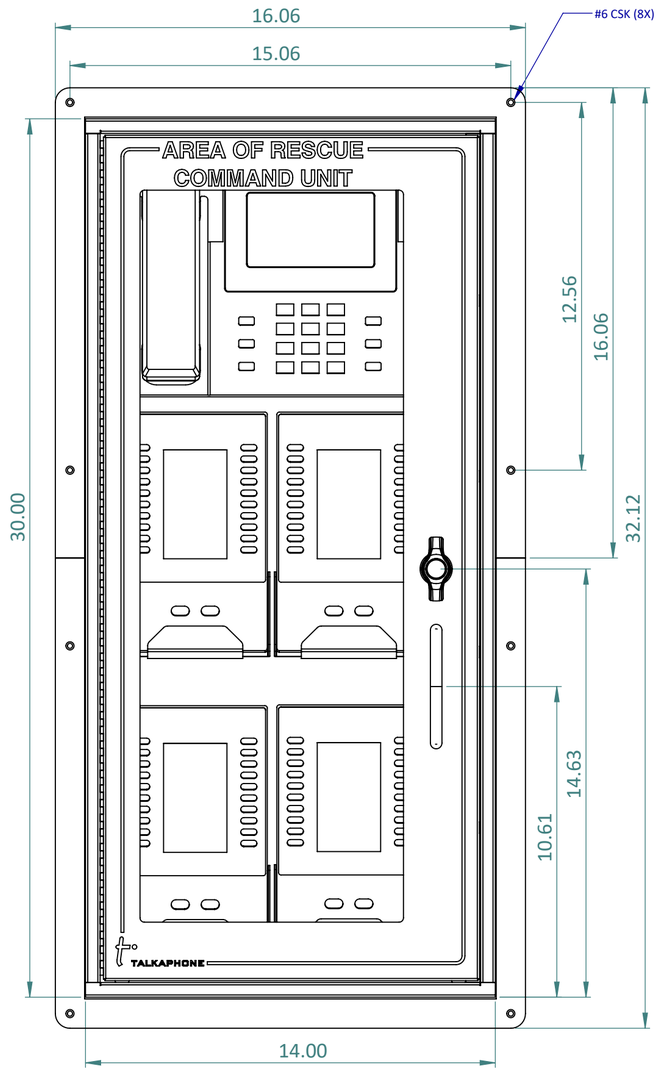

FRONT VIEW

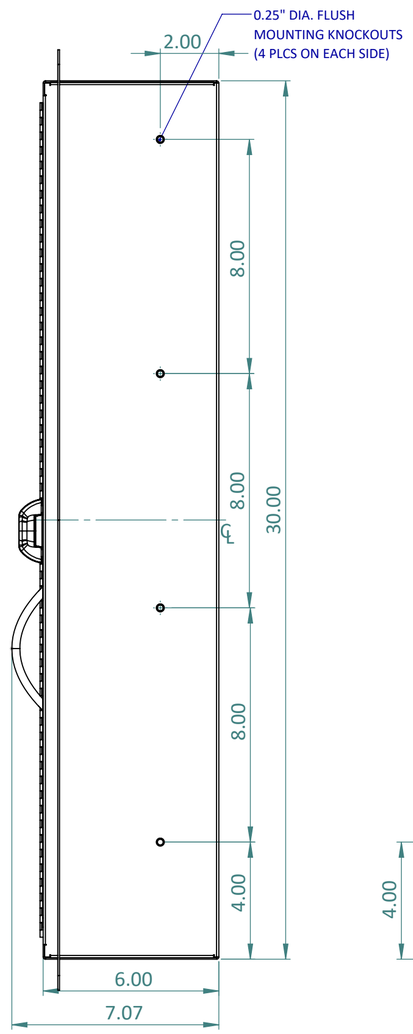

SIDE VIEW

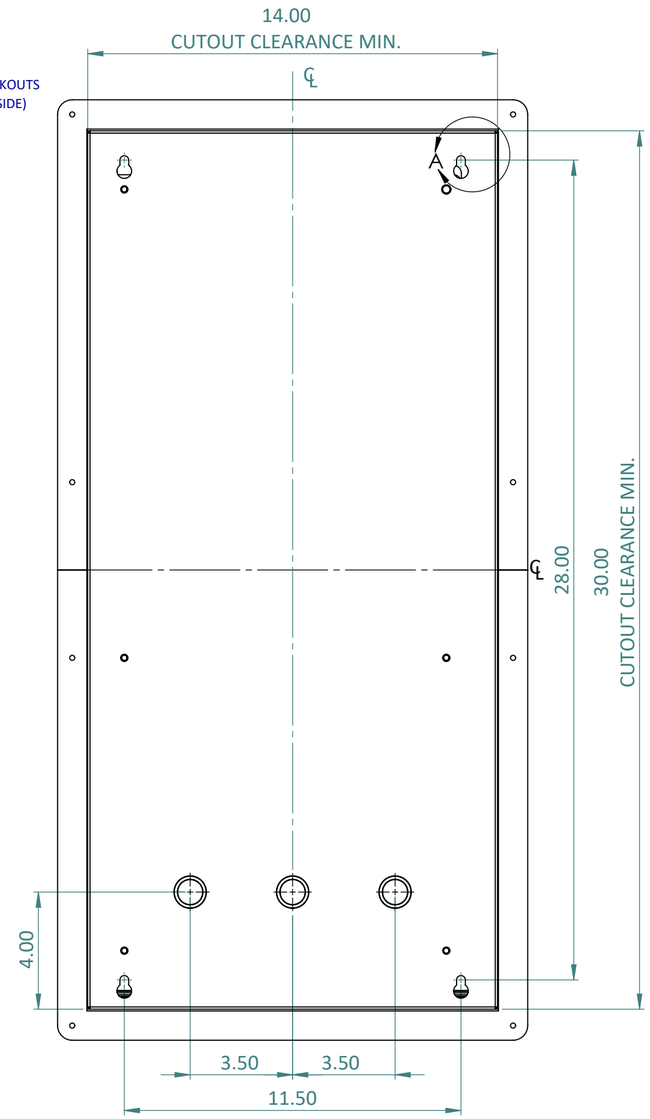

REAR VIEW

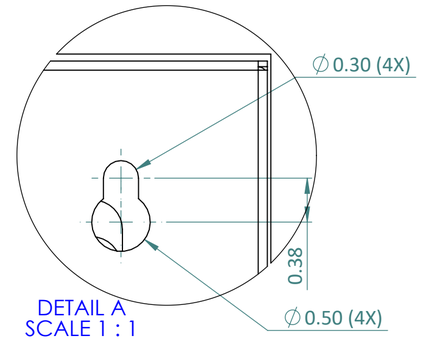

DETAIL A
SCALE 1 : 1

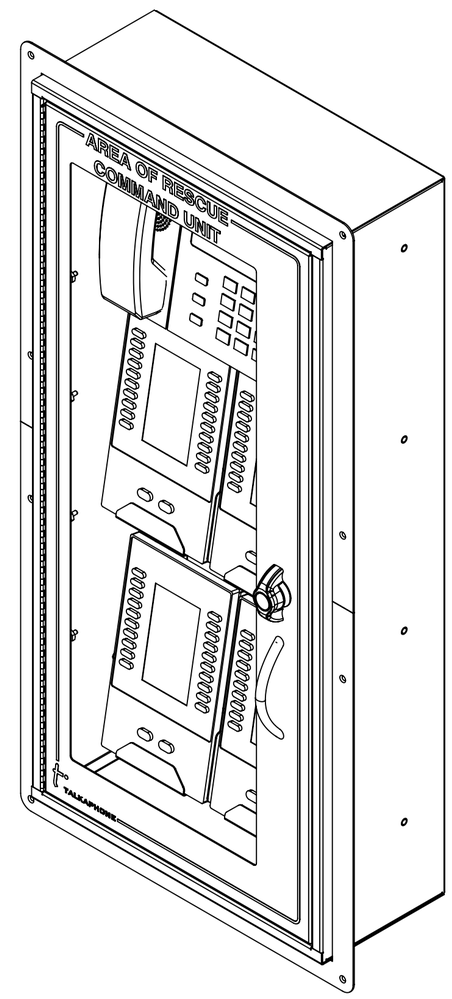

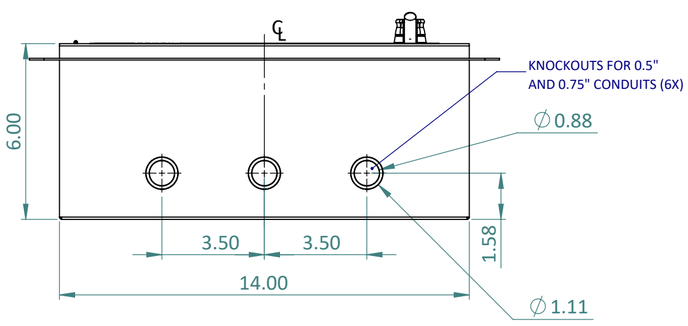

BOTTOM VIEW

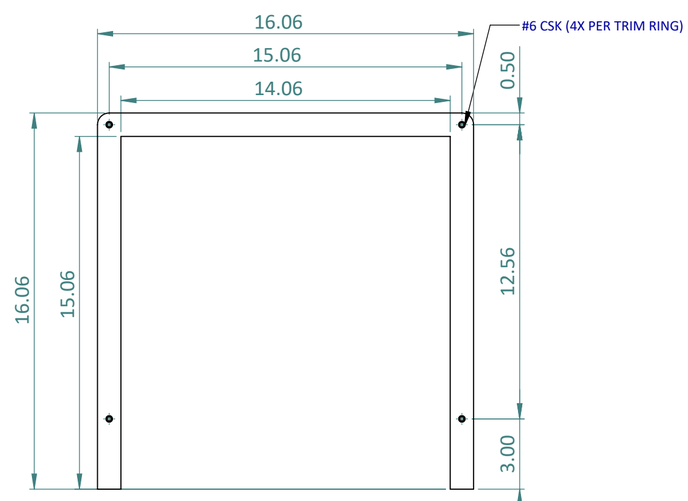

MODEL NO.: AOR-IP-TR160
TRIM RING FOR AOR-IP-120-CU AND AOR-IP-160-CU
QTY: 2 REQUIRED (FOR TOP AND DOWN)

REV.	DESCRIPTION	DATE	APPROVED
1.0	MARKETING RELEASE	04/07/2020	K PATEL

REVISIONS

	NAME	DATE
DRAWN	K PATEL	04/07/2020
CHECKED		
ENG APPR.		
MFG APPR.		
Q.A.		

FINISH

COMMENTS:

PROPRIETARY AND CONFIDENTIAL
THE INFORMATION CONTAINED IN THIS DRAWING IS THE SOLE PROPERTY OF TALK-A-PHONE, LLC. ANY REPRODUCTION IN PART OR AS A WHOLE WITHOUT THE WRITTEN PERMISSION OF TALK-A-PHONE, LLC IS PROHIBITED.

TALKAPHONE
TALK-A-PHONE, LLC
7530 N. NATCHEZ AVE., NILES, IL 60714
WWW.TALKAPHONE.COM

DWG. NO.

SIZE: C
PART NO. AOR-IP-160-CU AND AOR-IP-TR160
DWG. TITLE: AREA OF RESCUE COMMAND UNIT, 160 STATIONS, FLUSH MOUNT
REV 1.0
SCALE: 1:4
WEIGHT:
SHEET 1 OF 1