LYNN WELDING

Welding • Machining • Fabrication

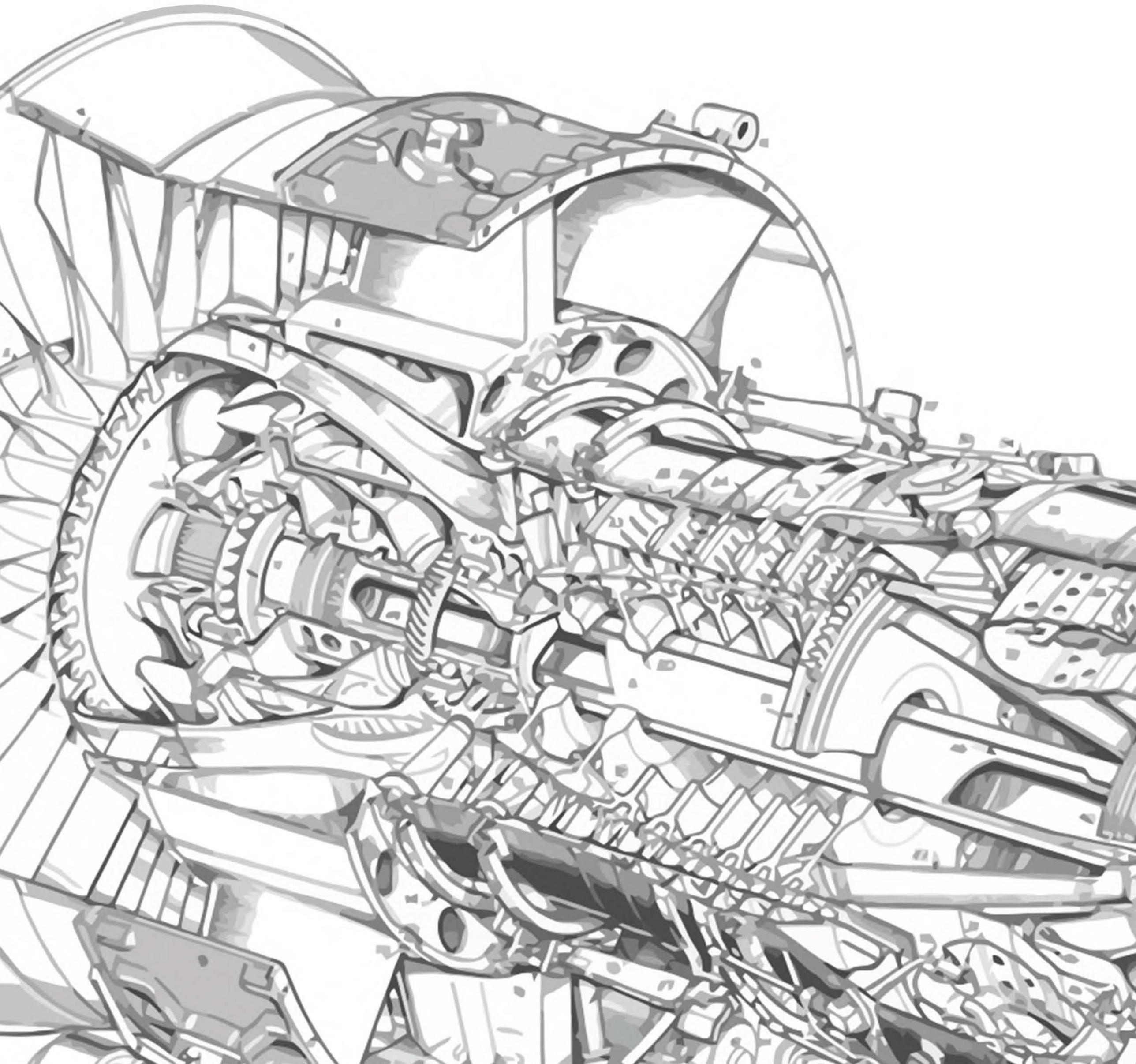

The statue mounted at the entrance of Lynn Welding's headquarters was designed, fabricated and welded by our staff member who has a passion for what he does, and it clearly shows!

"Every day we come into Lynn Welding we arrive with a true purpose. And that purpose is to be the best welding company in America! We have the recipe to get there and the key ingredients are our team members. It's in our culture to support each other and promote the growth and advancement of each team member. It's in our culture to find people with a passion for what they do. It's in our culture to have fun at work and thrive in an environment of positivity that drives us all. Our culture and values are apparent to our customers, it's the excellent customer service, quality and on time deliveries that are driven by our Team Members every day.

Being the best welding company in America is not a destination for us, it's a daily experience!"

Darius Kania
Vice President of Lynn Welding

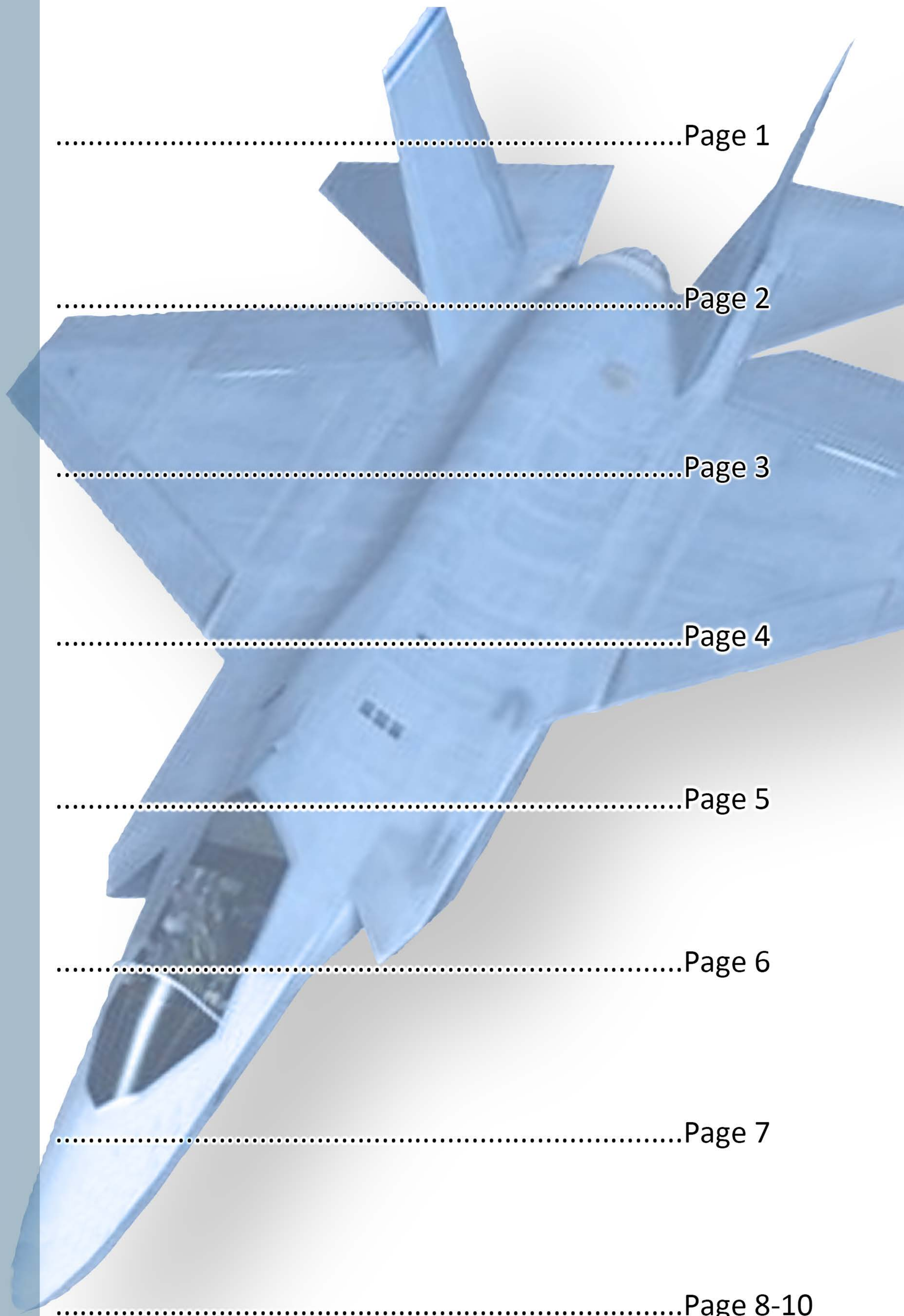

FUSION WELDING ..... Page 1

ROBOTIC WELDING ..... Page 2

RESISTANCE WELDING ..... Page 3

BRAZING ..... Page 4

FABRICATION ..... Page 5

MACHINING ..... Page 6

FIXTURE BUILDING ..... Page 7

CERTIFICATIONS ..... Page 8-10

75 Rockwell Road | 136 Rockwell Road
Newington, CT 06111
(860) 667-4400
www.lynnwelding.com
sales@lynnwelding.com

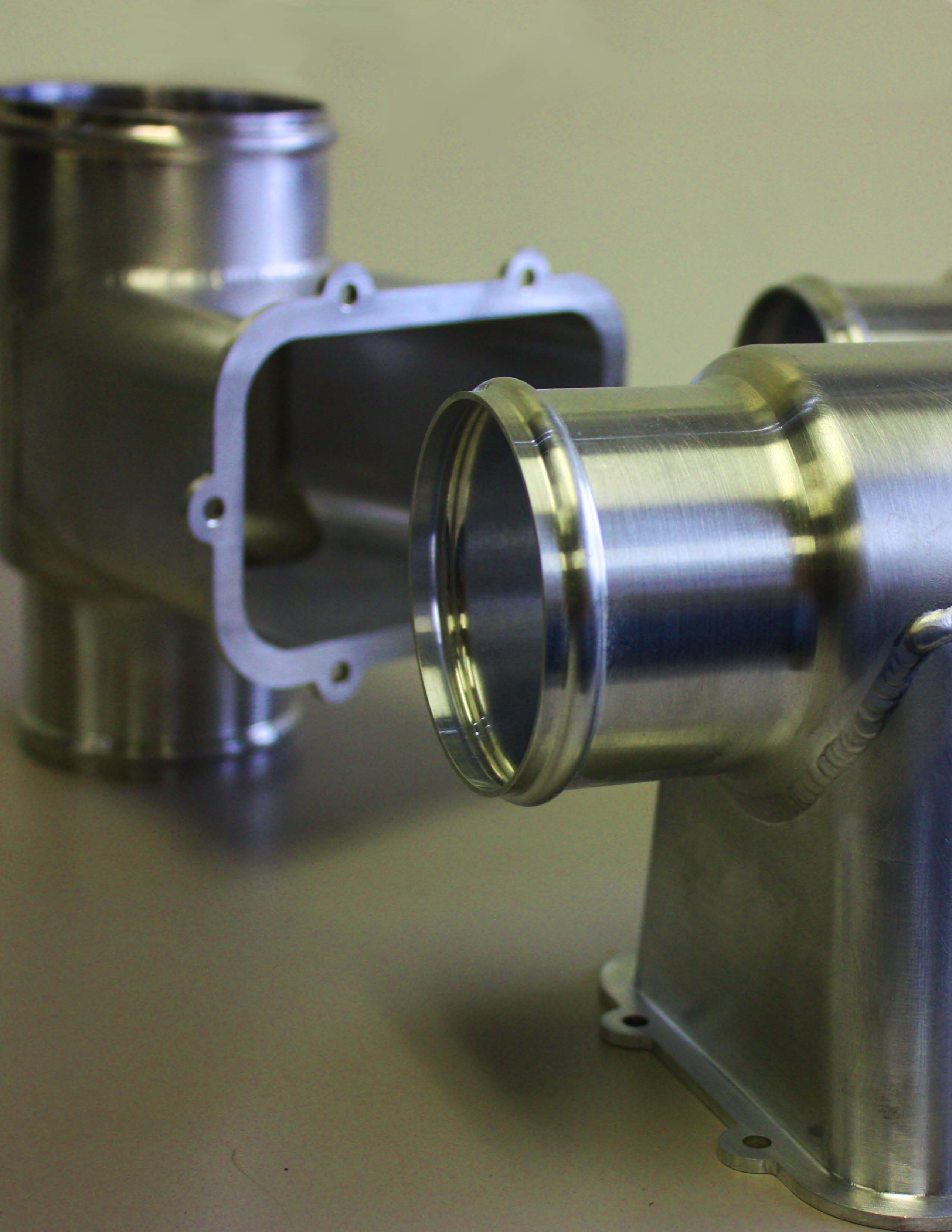

FUSION WELDING

CERTIFIED IN MOST COMMON AND EXOTIC ALLOYS

TIG WELDING FACILITY LIST

- 20 Miller Dynasty 350 TIG Welders
- 3 Miller Maxstar 200 TIG Welders
- 1 Miller Syncrowave 300 Tig Welder
- 1 Miller Syncrowave 500 Tig Welder
- Millermatic 350P MIG Welder
- Weldlogic Automatic Tig Welding System
- Custom 48” x 48”x 36” Vacuum Welding Chamber
- Custom 72” x 48” x 32” Purge Welding Chamber
- Mbraun 48” x 36” x 36” Vacuum Welding Chamber
- CWI (Certified Welding Inspectors)
- 10,000 square foot welding department
- 1 Miller Dynasty 280
- Approved weld procedures for most alloys

ALUMINUM

INCONEL

TITANIUM

GREEK ASCOLOY

STAINLESS

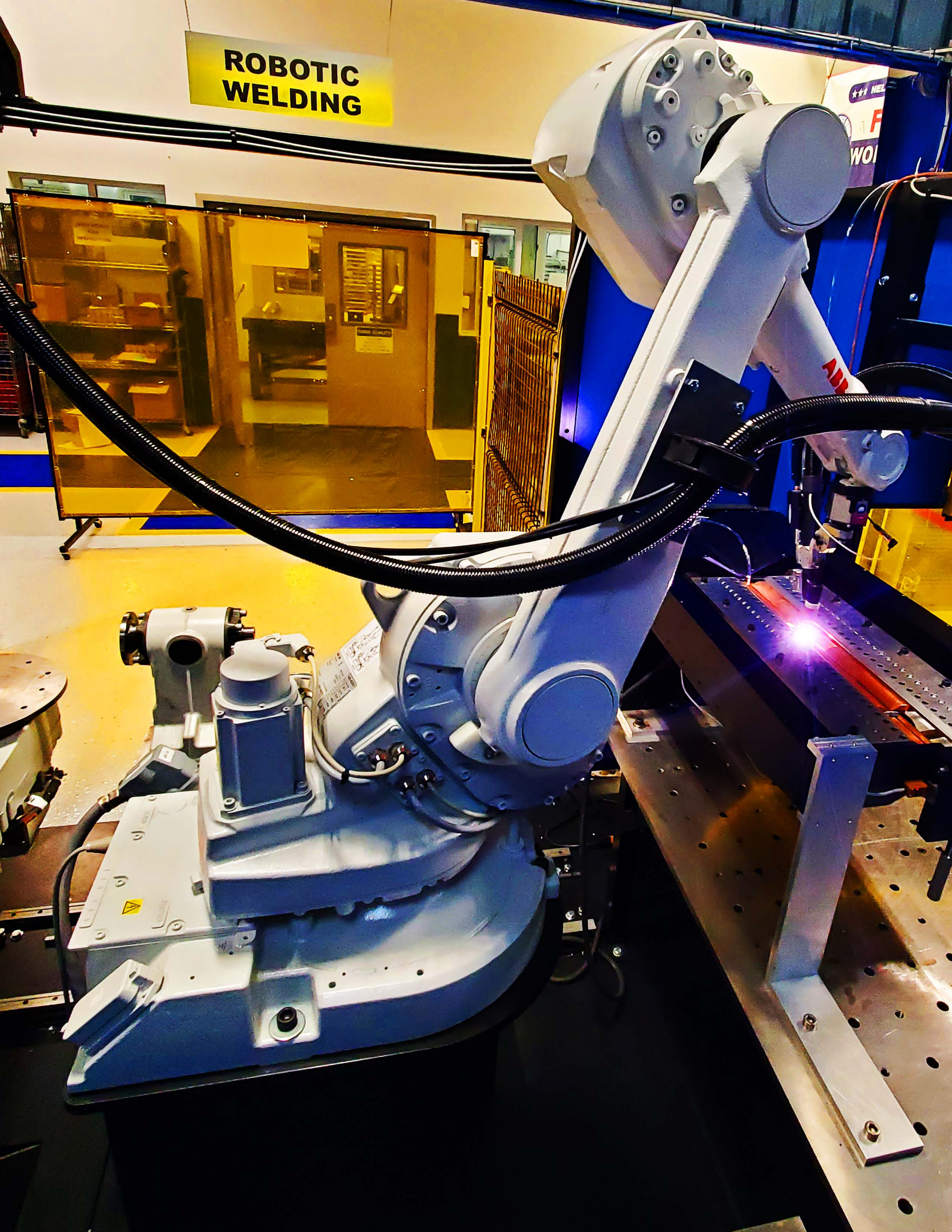
ROBOTIC
WELDING

ROBOTIC WELDING

HIGH VOLUME PROJECTS OF GTAW ROBOTIC WELDING

ALUMINUM

INCONEL

TITANIUM

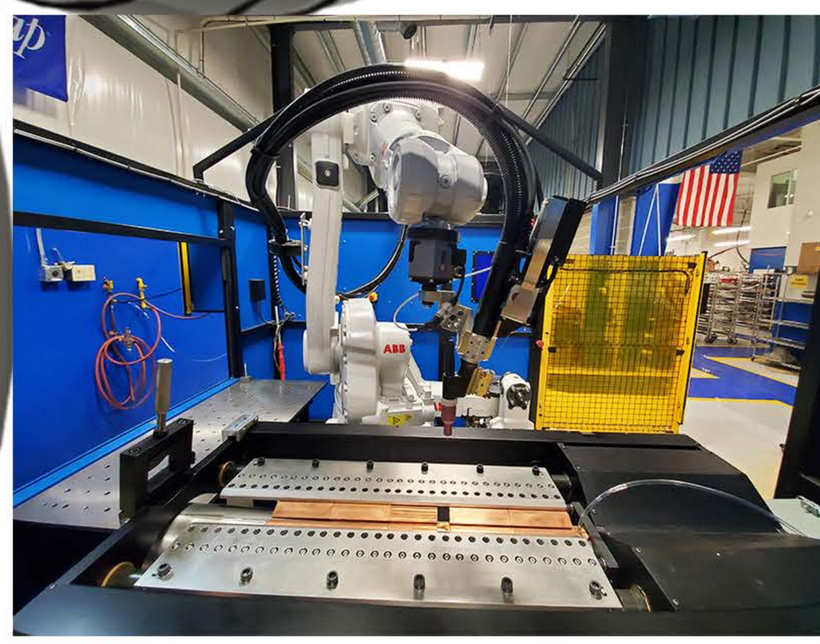

GREEK ASCOLOY

STAINLESS

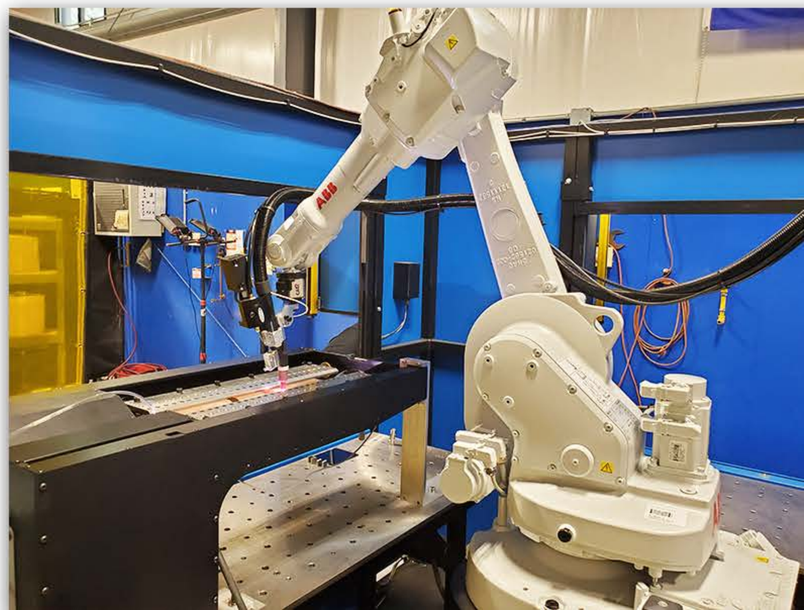

ROBOTIC WELDING FACILITY LIST

ABB IRB 1600
- 6-Axis Robotic Arm
- 10 kg. Payload & 1.45m Reach

ABB IRBP A-250
- 2-axis work-piece positioner
- Up to 250 kg weight capacity
- 1.18 diameter part envelope

ABB IRBP L-300 Tail Stock
- Helps Support Long parts with A-250
- Increases A-250 load capacity to 500 kg.

Fronius MagicWave 3000 TIG
- TIG welding up to 300A

Arc Voltage Control
- Enables through-the-arc seam-tracking for the TIG process

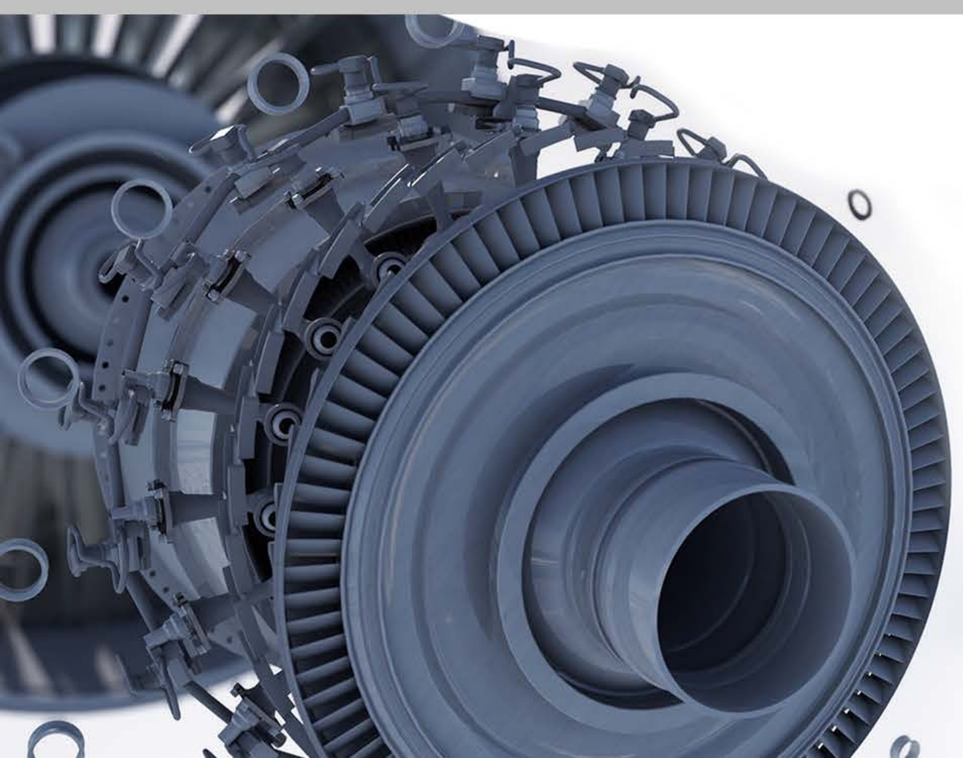

S/Q:15749562 DATE:03/26/15
SWISS MADE
PAT PEND

RESISTANCE WELDING

SCIAKY CERTIFIED OPERATORS

MICRO-RESISTANCE WELDING

RESISTANCE WELDING FACILITY LIST

- 1000 ADP Miyachi Micro Resistance Welder
- 1000 ADP Miyachi Micro Resistance Welder
- 200 KVA Sciaky Resistance Spot Welder
- 150 KVA Sciaky Resistance Spot Welder
- 150 KVA Sciaky Resistance Seam Welder
- 125 KVA Sciaky Resistance Spot Welder
- 100 KVA Sciaky Resistance Spot Welder
- 100 KVA Sciaky Resistance Seam Welder
- 100 KVA Sciaky Resistance Seam Welder
- 100 KVA Sciaky Resistance Seam Welder
- 100 KVA Sciaky Resistance Seam Welder
- 100 KVA Sciaky Spot Welder
- 100 KVA Sciaky Spot Welder
- 100 KVA Sciaky Spot Welder
- 90 KVA Sciaky Resistance Spot Welder
- 30 KVA Miyachi Micro-Resistance Welder
- 23 KVA Techna Portable Gun Welder
- 23 KVA Techna Portable Gun Welder
- 20 KVA Joyal Micro-Resistance Welder
- 0-1000 Micro-Ohm Resistance Surface Analyzer
- Metallurgical Laboratory Featuring:
  - 20X-100X Video Microscopes with Digital Readouts
    10X-80X Video Videoscope with Digital Readouts
  - 2lb-20,000lb Pull Tester
  - Acid Etching and Sample Mounting Station

PROJECTION WELDING

SPOT WELDING

SEAM WELDING

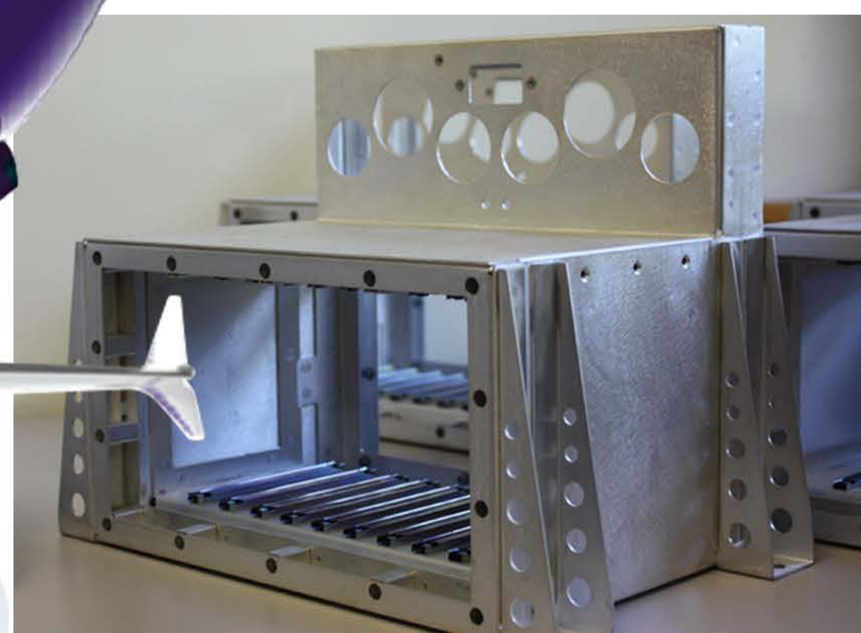

BRAZING

CERTIFIED BRAZING FOR THE AEROSPACE INDUSTRY

BASE METALS

- 300 Series Stainless
- 400 Series Stainless
- Inconel
- Mild Steel
- Copper
- Carbide
- Tungsten
- Aluminum

BRAZE ALLOYS

- Silver
- Nickel
- Copper

SOLDER ALLOYS

- Tin/Lead Solder
- Gold/Tin Solder (80& Max Au)

FUEL FILTERS

ELECTRONICS

NUT PLATES

ENGINE SEALS

TUBES/FERRULES

FABRICATION

FABRICATION CAPABILITIES

MACHINING, FORMING, CUTTING, BENDING, WELDING, ASSEMBLING, PAINTING: UNDER ONE ROOF!

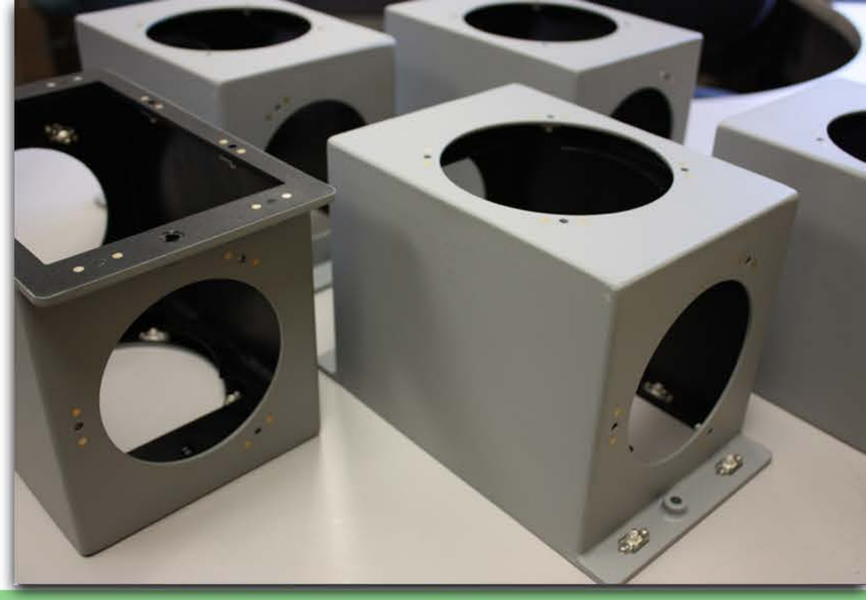

PAGE 5

FABRICATION DEPARTMENT CAPABILITIES

- Pressure Vessels
- Tanks
- Pipe Assemblies
- Jet Engine Assembly Carts
- Blade Transport Carts
- Dollies
- Racks
- Enclosures
- Custom Assemblies
- Scaffolds

MACHINING

WORLD CLASS MACHINING SERVICES FROM LYNN WELDING

WIRE EDM:
- FANUC ROBOTIC α-1B Wire EDM - (X 18”, Y 12”, Z 8”)

TURNING:
- OKUMA CNC LATHE. 10” Max Dia. , 1 ¾ Though Hole Spindle
- SOUTHWESTERN TRAK TRL 1840 CCS. (X 18”, Z 31”)
- HARDINGE LATHE. 6” Max Dia.
- HARDINGE LATHE. 6” Max Dia.
- WASINO LATHE. 22” Max Dia.

MILLING:
- MATSUURA VERTICAL
  CNC MILLING CENTER 4 AXIS. (X 30”, Y 19”, Z 19”)
- LEADWELL VERTICAL
  CNC MILLING CENTER 3 AXIS. (X 30”, Y 19”, Z 18”)
- DOOSAN VERTICAL
  CNC MILLING CENTER 3 AXIS (X 25”, Y 17.1”, Z 20”)
- SOUTHWESTERN TRAK DPM3 (X 28.5”, Y 17.5”, Z 13”)
- SOUTHWESTERN TRAK DPM3 (X 28.5”, Y 17.5”, Z 13”)
- SOUTHWESTERN TRAK K3SX. (X 32”, Y 16”, Z 15.5”)
- SOUTHWESTERN TRAK K3SX. (X 32”, Y 16”, Z 15.5”)
- BRIDGEPORT MILLING.

CNC TURNING

MANUAL MILLING

WIRE EDM

4 AXIS CNC MILLING

3 AXIS CNC MILLING

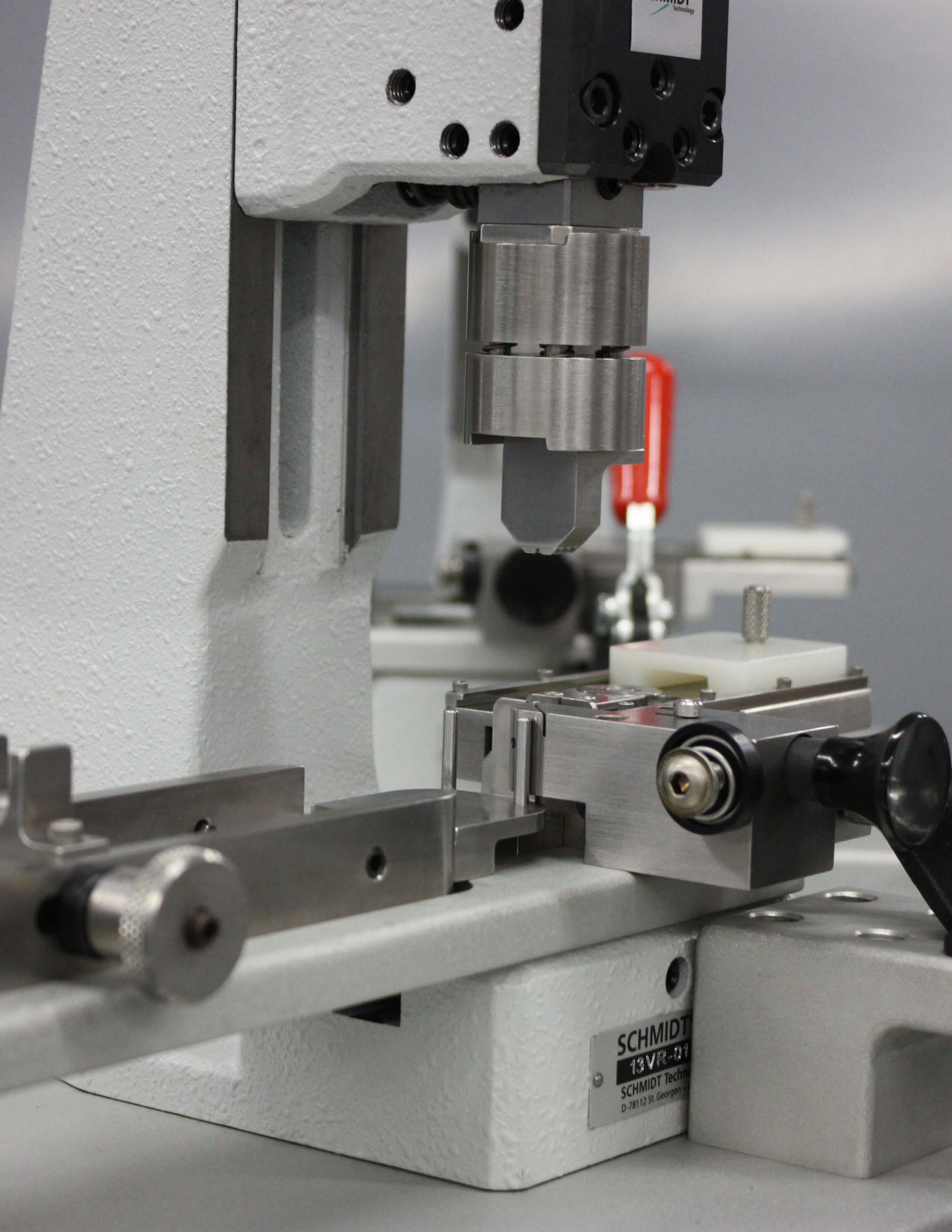
SCHMIDT
13VR-01
SCHMIDT Techn
D-78112 St. Georgen

FIXTURE BUILDING

LYNN WELDING FIXTURE BUILDING CAPABILITIES

- Sensor Based Fixtures
- Machine Retrofits
- Assembly Fixtures
- Hydraulic Fixtures
- Pneumatic Fixtures
- Brazing Fixtures
- Welding Fixtures
- Pressure Test Fixtures
- Test Equipment
- Test Rigs

- Solid Works Software
- Autocad Software
- Process Design
- Engineering Services

ASSEMBLY FIXTURES

SEMI-AUTOMATIC FICTURES

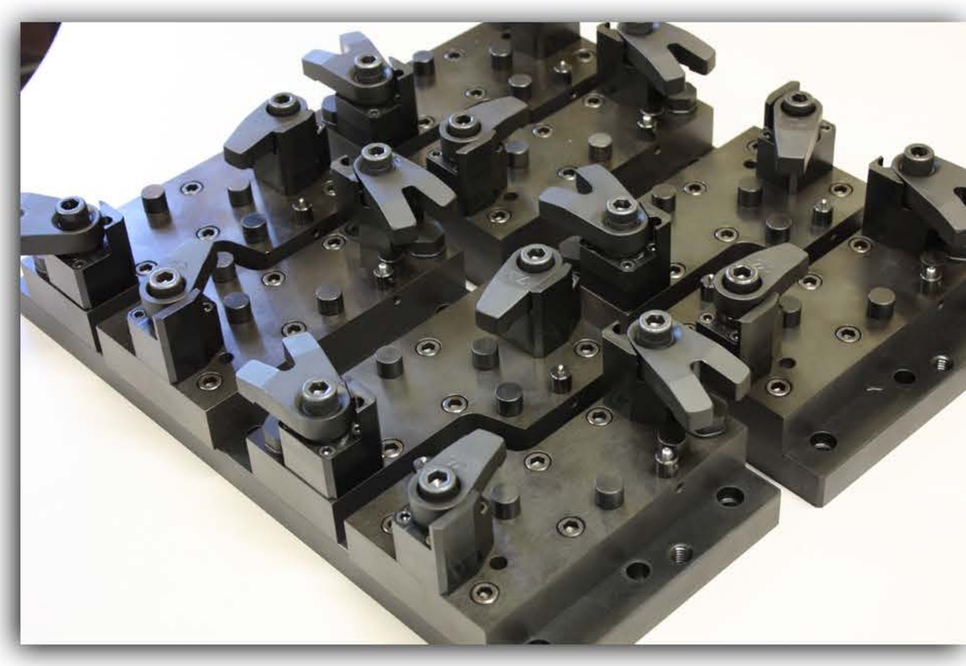

MACHINING FIXTURES

WELDING FICTURES

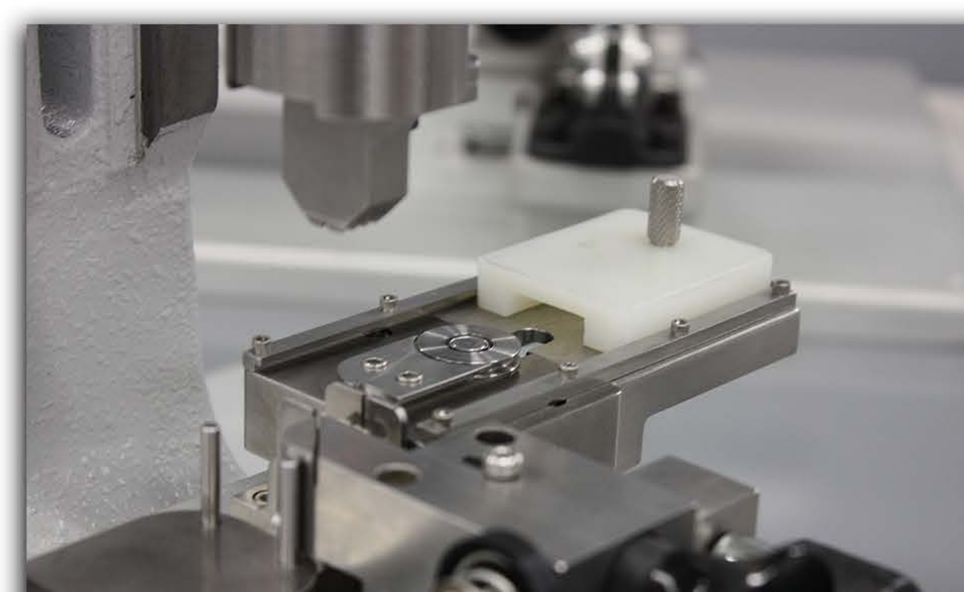

CERTIFICATIONS

Pratt & Whitney
A United Technologies Company

Fusion Welding *(LCS APPROVED FACILITY)*

PWA 16-1 (Carbon and Low Alloy Steels)
PWA 16-2 (Corrosion-resistance steels other than Precipitation Hardenable)
PWA 16-22 (Precipitation Hardenable, Corrosion-resistance steels)
PWA 16-222 (Cres. Precipitation Hardenable Alloys)
PWA 16-3 (Nickel and Non-precipitation Hardenable Nickel Alloys)
PWA 16-33 (Precipitation Hardenable Nickel Alloys)
PWA 16-37 (NI & NON PRECIP. HARD. NICKEL ALLOYS WELDED TO COBALT ALLOYS)
PWA 16-333 (NI & NON PRECIP. HARD. NI ALLOYS WELDED TO PRECIP. HARD. NI ALLOYS)
PWA 16-4 (Aluminum Alloys)
PWA 16-6 (Commercial Pure Titanium)
PWA 16-66 (Titanium Alloys)
PWA 16-666 (Titanium Alloys, Special Alloy Filler Metal Requirement)
PWA 16-7 (Cobalt ALLOYS)
PWA 16-777 (Cobalt to Nickel Alloys)

Resistance Welding

PWA 15 Seam Resistance Welding (Thickness Range .015 - .123)
PWA 15 Spot Resistance Welding (Thickness Range .0009 - .123)

Brazing

AMS 2664 High Temp Manual Braze, Torch Braze.
AMS 2665 Low Temp Manual Braze, Torch Braze.

Tack Welding

PWA 36951

Pratt & Whitney Canada
A United Technologies Company

Fusion Welding *(LCS APPROVED FACILITY)*

CPW 24-1A (Carbon and Low Alloy Steels)
CPW 24-2AJ (Corrosion-resistance steels other than Precipitation Hardenable)
CPW 24-22A (Precipitation Hardenable, Corrosion-resistance steels)
CPW 24-3AJ (Nickel and Non-precipitation Hardenable Nickel Alloys)
CPW 24-33AJ (Precipitation Hardenable Nickel Alloys)
CPW 24-4AJ (Aluminum Alloys)
CPW 24-6AJ (Commercial Pure Titanium)
CPW 24-66AJ (Titanium Alloys)
CPW 24-7A (Cobalt ALLOYS)

Resistance Welding

CPW 23 Seam Resistance Welding (Thickness Range .015 - .123) Spec YC-1
CPW 23 Spot Resistance Welding (Thickness Range .015 - .123) Spec YC-1

SIKORSKY
A LOCKHEED MARTIN COMPANY

Fusion Welding

AWS D17.1 / MIL-STD-2219
Carbon and Low Alloy Steels
Corrosion-resistance steels other than Precipitation Hardenable
Precipitation Hardenable, Corrosion-resistance steels
Cres. Precipitation Hardenable Alloys
Nickel and Non-precipitation Hardenable Nickel Alloys
Precipitation Hardenable Nickel Alloys
NI & NON PRECIP. HARD. NICKEL ALLOYS WELDED TO COBALT ALLOYS
NI & NON PRECIP. HARD. NI ALLOYS WELDED TO PRECIP. HARD. NI ALLOYS
Aluminum Alloys
Commercial Pure Titanium
Titanium Alloys
Titanium Alloys, Special Alloy Filler Metal Requirement
Cobalt Alloys
Cobalt to Nickel Alloys

Brazing

SS8731 / MIL-B-7883

Resistance Welding

AWS D17.2
MIL-W-6858
SAE-AMS-W-6858

UTC Aerospace Systems
Hamilton Sundstrand
A United Technologies Company

Fusion Welding

AWS D17.1
MIL-STD 2219
HS 191 CL1A
HS 191 CL1B
HS 191 CL1C
HS 191 CL2A
HS 191 CL2B
HS 191 CL3

Resistance Welding

AMS-W-6858
AWS D17.2
HS 3944
HS 91
MIL-W-6858
SAE-AMS-W-6858

Brazing

HS 198 TYA3
PN 05.41
PN 05.41-11
Mil-B-7883

BOEING

Fusion Welding - CRES Heat Resist Nickel - Cobalt Alloys BAC 5975 / Process Code: 201 / Specification Title: Fusion Welding of Metals
Fusion Welding of Aluminum Alloys- BAC 5975 / Process Code: 210 / Specification Title: Fusion Welding for Aerospace Applications
Fusion Welding for Aerospace Applications - Aluminum Alloys MIL-STD-2219 / Process Code: 211 / Specification Title: Fusion Welding for Aerospace Applications
Fusion Welding for Aerospace Applications- Aluminum Alloys- AWS D17.1 / Process Code: 211A / Specification Title: Fusion Welding for Aerospace Applications
Fusion Welding for Aerospace Applications - Aluminum Alloys AMS-STD-2219 / Process Code: 211B / Specification Title: Fusion Welding for Aerospace Applications
Fusion Welding for Aerospace Applications - Aluminum Alloys MIL-W-8604 / Process Code: 211C / Specification Title: Fusion Welding for Aerospace Applications
Fusion Welding - Titanium - Titanium Alloys BAC 5975 / Process Code: 214 / Specification Title: Fusion Welding of Metals

Resistance Welding

Resistance Welding - Steel Alloys BAC 5977 / Process Code: 220 / Specification Title: Resistance: Spot/Roll Spot/Seam
Resistance Welding - Ni. - Co. Base Alloys BAC 5977 / Process Code: 222 / Specification Title: Resistance: Spot/Roll Spot/Seam
Resistance Welding - Aluminum Alloys MIL-W-6858 / Process Code: 231 / Specification Title: Resistance Welding: Spot – Seam
Resistance Welding - Titanium Alloys BAC 5977 / Process Code: 234 / Specification Title: Resistance: Spot/Roll Spot/Seam
Resistance Welding - Titanium Alloys MIL-W-6858 / Process Code: 235 / Specification Title: Resistance Welding: Spot – Seam
Resistance Welding- Material Group II PS 22000 (thickness range .032”-.125”- Precleaning to be done by an outside source/ Process Code: S220 Specification Title: Resistance Welding: Spot-Seam
Resistance Welding- Aluminum Alloys PS 22010 / Process Code: S230 / Specification Title: Resistance Welding Aluminum
Resistance Welding- PS 22010 Resistance Welding of Aluminum Alloys using a weld-through sealant.

Brazing

Silver Brazing of Steel Copper Nickel - Cobalt Alloys - Torch- Induction BAC 5940 / Process Code: 251 / Specification Title: Silver Brazing

Other

Metallurgical Testing Met. Testing / Process Code: 803 / Specification Title: Metallurgical Testing
Processor Basic Quality System for D1-4426 approval only Quality System / Process Code: 003 / Specification Title: Processor Quality System
Welders and Weld Operator Qualification / Process Code: 808 / Specification Title: Qual / Cert

54Vi
SELECT

CERTIFICATIONS

AgustaWestland
A Finmeccanica Company

Resistance Welding, Spot, Seam, Stich

Spot welding spec STA-100-81-15 A

KAMAN
Aerospace

Process Code	Description	Specification
241-1	Welding,	Fusion AWS D17.1
241-2	Welding,	Resistance Stitch SAE-AMS-W-6858
241-3	Welding,	Resistance Spot SAE-AMS-W-6858
241-4	Welding,	Resistance Seam SAE-AMS-W-6858
241-5	Welders,	Fusion, Qualification AWS D17.1

Rolls-Royce

Rolls Royce Corp. Sub Tier Supplier (RRU6)

Fusion Welding

EDS 1306
EPS 14500
AWS D17.1
EIS 1200 Acceptance Criteria for Fusion Welding
EPS 14530 Fusion Welding

Resistance Welding Spot and Seam

EPS 14520 Resistance Welding (spot and seam) of Ferrous, Nickel and Cobalt Base Alloys
EPS14523 Projection Welding

Qualified procedures in-house

AMS-STD-1595
AMS 2668
AWS C3.5
AWS D17.1
AWS D1.1
AWS D1.2
ASME Section IX

Westinghouse

Fusion Welding

QMSP-1012

ULA
United Launch Alliance

Fusion Welding

AMS-STD-2219 Fusion Welding (All Types)
AC 7004 / AS 9003 NADCAP Accreditation to AS 9003
AC7110/5 NADCAP Audit for Fusion Welding
AC7110/4 NADCAP Audit for Resistance Welding
AC7110/13 NADCAP Audit for Metal Evaluation of Welds
AC7110/12 NADCAP Audit for Operator Qualification
AC7110/1 NADCAP Audit for Brazing (Torch/Induction)
AC7110 NADCAP Audit For Welding/Brazing

Bell Helicopter
A Textron Company

Fusion Welding

BPS 4404 Fusion Welding

Resistance Welding

QPS 101
BPS 4115 Resistance Welding
BPS 4113 Preperation of metals for resistance welding
MIL-W-6858 RESISTANCE WELDING SPOT AND SEAM

GE Aviation

Fusion Welding

CS - Welding, Titanium CS00 **M50T1;P8TF3;P8TF11;P21TF6
CF - Welding, Gas Shielded Arc, CF01 *P8TF3;M50T1;P8TF11;P21TF6; AWS D17.1;MILTT-5021.

Brazing

CD – Brazing, CD02 ***M50T1;P9TF1;ANSI/AWSC3.4.

Resistance Welding

CE - Welding, Resistance, CE00 Spot; Seam; Stud Resistance Welding,; P8TF4 ;AWS D17.2.

Cessna
A Textron Company

CSMP039 - Fusion Welding of Aluminum, Steel, Nickel and Tianium Alloys

Honeywell

Fusion Welding Code A per Act AC7110/05

037-0143-000
037-0143-100
AMS-STD-2219
AWS D17.1
AMS2685
AMS2689
AWS D17.1/D17.1M
GPS4100-1
GPS7315-1
GPS7320-1
LW 0201-002
M691546
MIL-STD-2219
MIL-W-18326
MIL-W-8604
MIL-W-8611
P6200
P6202
P6207
WBS18
WBS28
WBS31
WBS32
WBS5018
WBS5059
WBS7018

International Traffic in Arms Regulations Compliant
ITAR

Lynn Welding is ITAR registered.

Raytheon

Fusion Welding

AWS D17.1 Class A, B & C
AWS D1.1 Welding of Carbon Steel
AWS D1.2 Welding of Aluminum
AWS D1.3 Welding of Sheet Steel
AWS D1.6 Welding of Stainless Steel
AWS D9.1 Welding of Sheet Metal

Resistance Welding

AWS D17.2 Class A, B, & C

Torch Brazing

AWS C3.4

NAVSEA
NAVAL SEA SYSTEMS COMMAND

S9074-AQ-GIB-010/248
NAVSEA TECHNICAL PUBLICATION: REQUIRE MENTS FOR WELDING AND BRAZING PROCEDURE AND PER-FORMANCE QUALIFICATION

S9074-aq-gib-010/278
NAVSEA TECHNICAL PUBLICATION: REQUIREMENTS FOR FABRICATION WELDING AND INSPECTION, AND CASTING INSPECTION AND REPAIR FOR MACHINERY, PIPING, AND PRESSURE VESSELS

CERTIFICATIONS

GENERAL DYNAMICS

Fusion Welding

A10458 AWS D17.1
MIL-STD-2219

Resistance Welding, Spot , Seam and Stitch

Mil-W-6858D

NORTHROP GRUMMAN

Fusion Welding
All Procedures are GTAW-MA (Gas Tungsten Arc Weld-Manual)

MIL-STD-278
AWS D17.1

Resistance Spot Welding

AWS D17.2/D17.2M:2019 0012-601/602

Hawker

TEXTRON AVIATION
AUTHORIZED PARTS RESELLER

Process Code	Specification
36B1	Fusion- Aluminum Alloys
36C1	Fusion-Magnesium
36D1	Fusion- Steel Alloys
36EA	Fusion-Titanium Alloys
36F	Resistance-Aluminum
36G	Resistance-Magnesium
36H	Resistance-Nickel and Cobalt
36I	Resistance-Steel
36J	Resistance-Titanium
36K	Resistance Seam

AMS-W-6858, AWS D17.2, Mil-W-6858, SAE-AMS-W-6858

Gulfstream

A GENERAL DYNAMICS COMPANY

Fusion Welding
All Procedures are GTAW-MA (Gas Tungsten Arc Weld-Manual)
AWS D17.1

Code	Description
5.03	Material Test, Metallographic
5.04	Material Test, Physical
6.01	Welding, Fusion (Titanium, Aluminum, Steel)
6.05	Brazing, Torch
GAMPS 2301	Resistance Foil, Mesh and Steel
GAMPS 2302	Fusion Welding - Inconel and Steel
GAMPS 2308	Fusion Welding - Titanium
GAMPS 2309	Fusion Welding - Aluminum
AWS C3.4	Brazing

U.S.ARMY

Ground Combat Vehicle Welding Code – Steel 12479550
GTAW and GMAW

M1 to M1 GTAW Method
M1 to M1 GMAW Method

Nadcap
Administered by PRI
ACCREDITED

Scope of Accreditation – Welding

AC7110 - Nadcap Audit Criteria for Welding/Brazing
AC7110/1 - Nadcap Audit Criteria for Brazing
Baseline (All Audits)
Supplement A- Torch (Additional requirements)
Supplement G- Processes Using gas (Additional requirements)
Supplement H- Processes using Flux (Additional requirements)

AC7110/4 - Nadcap Audit Criteria for Resistance Welding (Spot, Seam, Projection)
Baseline (All Audits)
Projection Welding- sheet
Seam Welding- sheet
Seam Welding- foil
Spot Welding- foil
Spot Welding- sheet
Supplement A - Aluminum/Magnesium (Additional Requirements)
Supplement B - Shear Testing (Additional Requirements)
Supplement F- Metallographic Evaluation of Resistance Welds
(Qualification and / or Process Control) (Additional requirements)

AC7110/4S Nadcap Supplemental Criteria for Resistance Welding
U10 GE Aviation
U11 The Boeing Company

AC7110/5 Nadcap Audit Criteria for Fusion Welding
Baseline (All Audits)
Supplement D – Titanium welding (Additional requirements)
Supplement F - Filler Materials (Additional Requirements)
Supplement G - Processes using Gas (For example GTAW, PAW) (Additional Requirements)
Supplement H- Preheat / Interpass temperature control (Additional requirements)

AC7110/5S- Nadcap Supplemental Audit Criteria for Fusion Welding
U10 GE Aviation
U11 The Boeing Company

AC7110/12 - Nadcap Audit Criteria for Welder/Welding Operator Qualification
Supplement A – Metallographic Evaluation of Welds (Additional requirements)

AC7110/12S- Nadcap Supplemental Audit Criteria for Welder / Welding Operator Qualification
U11 The Boeing Company

PERRY JOHNSON REGISTRARS, INC.

ANAB ACCREDITED ISO/IEC 17021 MANAGEMENT SYSTEMS CERTIFICATION BODY

ISO 9001:2015 Certified **AS 9100 Rev. D Certified**

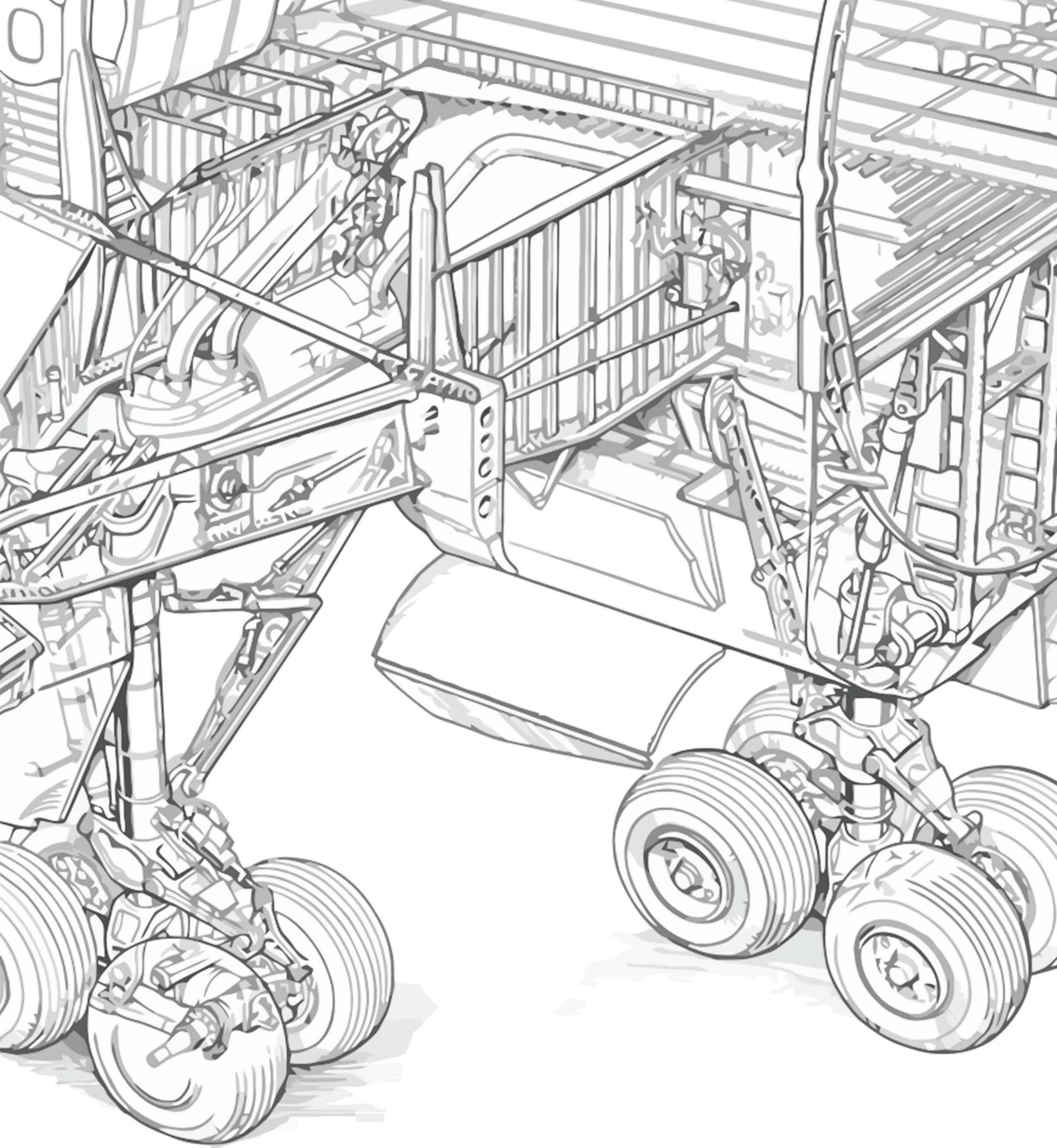

Check Out Our Video

75 Rockwell Rd, Newington CT 06111
tel. (860) 667-4400
www.LynnWelding.com
sales@lynnwelding.com